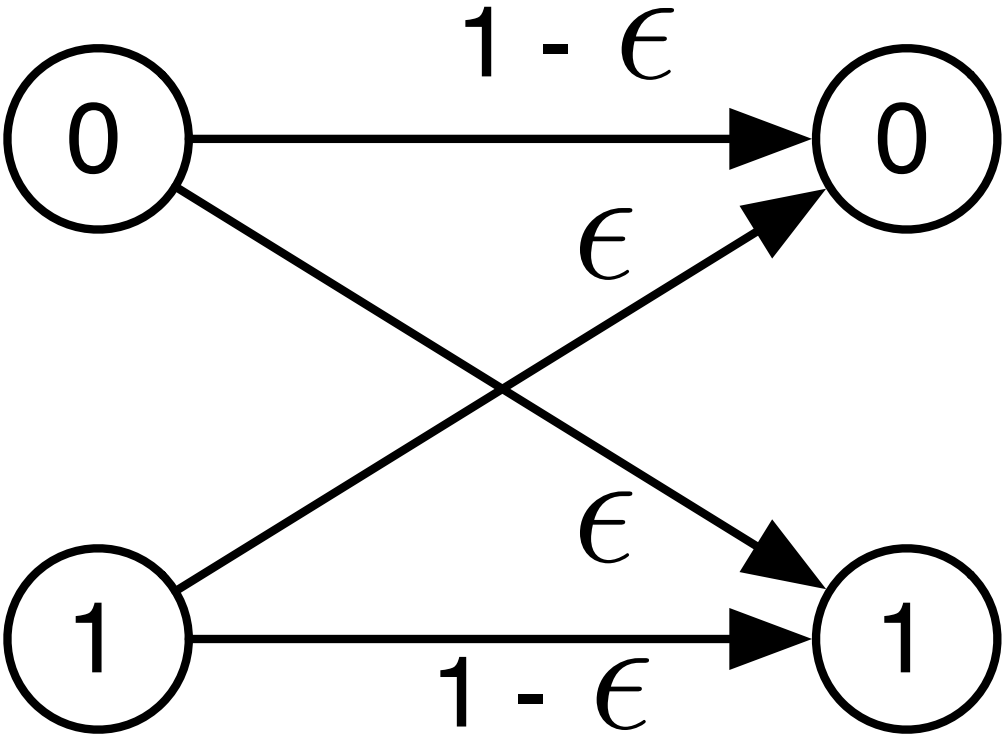
1 - ϵ
0
0
ϵ
ϵ
1
1
1 - ϵ